FM Approvals

CLASS NUMBER 1311

Examination Standard for Centrifugal Fire Pumps Split-Case Type

(Axial or Radial)

August 2023

© 2023 FM Approvals LLC. All rights reserved. This Standard is provided for informational purposes only, in support of the relationship between FM Approvals and its customers. This information does not constitute an approvals agreement, certification, or guarantee. No liability is assumed by or through the use of this information.

Foreword

This standard is intended to verify that the products and services described will meet stated conditions of performance, safety and quality useful to the ends of property conservation. The purpose of standards is to present the criteria for certification of various types of products and services.

Examination in accordance with this standard shall demonstrate compliance and verify that quality control in manufacturing shall ensure a consistently uniform and reliable product.

TABLE OF CONTENTS

1. INTRODUCTION 1
1.1 Purpose 1
1.2 Scope 1
1.3 Basis for Requirements 2
1.4 Basis for Certification 2
1.5 Basis for Continued Certification 2
1.6 Effective Date 2
1.7 System of Units 3
1.8 Normative References 3
1.9 Terms and Definitions 3
2. GENERAL INFORMATION 7
2.1 Product Information 7
2.2 Certification Application Requirements 7
2.3 Requirements for Samples for Examination 7
3. GENERAL REQUIREMENTS 9
3.1 Review of Documentation 9
3.2 Physical or Structural Features 9
3.2.1 Pump 9
3.2.2 Pump Casing 9
3.2.3 Water Passages 9
3.2.4 Impeller 9
3.2.5 Shaft 9
3.2.6 Shaft Seals 10
3.2.7 Bearings 12
3.2.8 Electric Motor 12
3.2.9 Coupling 13
3.2.10 Baseplate (Vertically Mounted Pumps Only) 13
3.2.11 Circulation Relief Valve 13
3.2.12 Miscellaneous Components 13
3.3 Pump Package 14
3.4 Materials 14
3.5 Markings 14
3.6 Manufacturer's Installation and Operation Instructions 15
3.7 Calibration 15
3.8 Tolerances 15
4. PERFORMANCE REQUIREMENTS 16
4.1 Design and Calculation Review 16
4.2 Performance 16
4.3 Suction Lift 17
4.4 Flange and Gasket Tightness 17
4.5 Hydrostatic Strength 17
4.6 Endurance Test (Vertically Mounted Pumps Only) 18
4.7 One Hour Test (Mechanical Seal Pumps Only) 18
4.8 Test Procedure 18
5. OPERATIONS REQUIREMENTS 19
5.1 Demonstrated Quality Control Program 19
5.2 Surveillance Audit 20
5.3 Manufacturer's Responsibilities 20

5.4 Manufacturing and Production Tests 20
5.4.1 Test Requirement No. 1 - *Performance Test* 20
5.4.2 Test Requirement No. 2 - *Leakage Test* 20
APPENDIX A: 21
APPENDIX B: 21
APPENDIX C: Test Procedures 22
C.1 Capacity Measurements 22
C.1.1 Weight 22
C.1.2 Volume 22
C.1.3 Venturi 22
C.1.4 Nozzles 22
C.1.5 Orifice Plate 23
C.1.6 Weir 24
C.1.7 Electromagnetic Flow Meters 24
C.2 Head Measurements 24
C.3 Power Measurements 25
C.4 Speed Measurement 25
C.5 Time Measurement 26
APPENDIX D: Axial Split-Case Centrifugal Fire Pump Units (Packages) 27
APPENDIX E: Tolerance 28
APPENDIX F: Figures 29
Figure F-1. Axial Split-Case Centrifugal Fire Pump (Shown with Mechanical Seals) 29
Figure F-2. Radial Split-Case Centrifugal Fire Pumps (Shown with Mechanical Seals) 30
APPENDIX G: 31

1. INTRODUCTION

1.1 PURPOSE

1.1.1 This standard states testing and certification requirements for horizontal (axial) or vertical (radial), split-case type, centrifugal fire pumps that supply water to fire protection systems. These pumps must be available for many years to operate reliably at rated capacities and pressures during emergency fire incidents, despite being idle for extended periods.

1.1.2 Testing and certification criteria may include, but are not limited to, performance requirements, marking requirements, examination of manufacturing facility(ies), audit of quality assurance procedures, and a surveillance audit program.

1.2 SCOPE

1.2.1 This standard encompasses the design and performance requirements for horizontal (axial) or vertical (radial), split-case type, centrifugal fire pumps for use in fire protection systems. Certification is limited to horizontal (axial) or vertical (radial), split-case type, centrifugal pumps which have a rated pressure of at least 40 psi (275 kPa). In cases where metric sized centrifugal fire pumps are to be examined for certification, test criteria comparable to the United States equivalent size shall be used.

1.2.2 This standard encompasses the requirements for single and multistage split-case fire pumps.

1.2.3 Requirements for other types of centrifugal fire pumps are detailed in the following examination standards:

Class	***Centrifugal Pump Type***
1310	Multi Stage, Multi Outlet
1312	Vertical Shaft Turbine Type
1319	Horizontal End-Suction Type
1370	Vertical Turbine Barrel Type
1371	In-Line Type

1.2.4 Requirements for other major components in the pump package are detailed in the following examination standards:

Class	***Equipment***
1046	Fire Pump Flowmeter Systems
1321/1323	Controllers for Electric Motor Driven and Diesel Engine Driven Fire Pumps
1333	Diesel Engine Fire Pump Drivers
1336	Fire Pump Couplings and Flexible Connecting Shafts for Fire Protection Service
1359	Trim Water Pressure Relief Valves
2311	Pressure Gauges for Fire Protection Systems

1.3 BASIS FOR REQUIREMENTS

1.3.1 The requirements of this standard are based on experience, research and testing, and/or the standards of other organizations. The advice of manufacturers, users, trade associations, jurisdictions and/or loss control specialists was also considered.

1.3.2 The requirements of this standard reflect tests and practices used to examine characteristics of horizontal (axial) or vertical (radial), split-case type, centrifugal fire pumps for the purpose of obtaining certification.

1.4 BASIS FOR CERTIFICATION

Certification is based upon satisfactory evaluation of the product and the manufacturer in the following major areas:

1.4.1 Examination and tests on production samples shall be performed to evaluate:

- the suitability of the product;
- the performance of the product as specified by the manufacturer and required for certification; and as far as practical,
- the durability and reliability of the product.

1.4.2 An examination of the manufacturing facilities and audit of quality control procedures shall be made to evaluate the manufacturer's ability to consistently produce the product which was examined and tested, and the marking procedures used to identify the product. Subsequent surveillance may be required by the certification agency in accordance with the certification scheme to ensure ongoing compliance.

1.5 BASIS FOR CONTINUED CERTIFICATION

The basis for continual certification may include, but is not limited to, the following based upon the certification scheme and requirements of the certification agency:

- production or availability of the product as currently certified;
- the continued use of acceptable quality assurance procedures;
- compliance with the terms stipulated in the certification;
- satisfactory re-examination of production samples for continued conformity to requirements; and
- satisfactory surveillance audits conducted as part of the certification agency's product surveillance program.

1.6 EFFECTIVE DATE

The effective date of this examination standard mandates that all products tested for certification after the effective date shall satisfy the requirements of this standard.

The effective date of this standard is eighteen (18) months after the publication date of the standard for compliance with all requirements.

1.7 SYSTEM OF UNITS

Units of measurement used in this Standard are United States (U.S.) customary units. These are followed by their arithmetic equivalents in International System (SI) units, enclosed in parentheses. The first value stated shall be regarded as the requirement. The converted equivalent value may be approximate. Conversion of U.S. customary units is in accordance with the American National Standards Institute (ANSI)/Institute of Electrical and Electronics Engineers (IEEE)/American Society for Testing Materials (ASTM) SI 10.

Two units of measurement (liter and bar), outside of but recognized by SI, are commonly used in international fire protection and are used in this standard.

1.8 NORMATIVE REFERENCES

The following documents are referred to in the text in such a way that some or all of their content constitutes requirements of this document. For dated references, only the cited edition applies.

ANSI/IEEE/ASTM SI 10, *American National Standard for Metric Practice*
American Petroleum Institute (API) Standard 682, *Pumps—Shaft Sealing Systems for Centrifugal and Rotary Pumps*
International Electro-Technical Commission (IEC) 60034-1, *Rotating electrical machines - Part 1: Rating and performance*
National Electrical Manufacturers Association (NEMA) MG 1, *Motors and Generators*

1.9 TERMS AND DEFINITIONS

For purposes of this standard, the following terms apply:

Accepted
Installations acceptable to the authority having jurisdiction and enforcing the applicable installation rules. Acceptance is not a characteristic of a product. A product accepted for one installation may not be acceptable elsewhere.

Axial Split-Case Centrifugal Fire Pump
A pump with the shaft in a horizontal position, with a housing which is split in a horizontal plane through the shaft centerline for easy maintenance and in which the pressure is developed by the action of centrifugal force. The term horizontal split-case is also used.

Corrosion Resistant
Having resistance to corrosion equal to or exceeding that of bronze alloy having a minimum copper content of 80 percent, or is of Series 300 Stainless Steel construction.

Design Working Pressure
The maximum pressure for which a pump component is designed. This pressure is equal to or greater than the maximum pressure developed by the pump at shut off or churn conditions with the largest impeller available, plus the maximum suction pressure for the pump.

Dynamic Shaft Deflection
Dynamic condition where the axial centerline of the shaft does not coincide with the axial centerline of the bearings.

Efficiency

The ratio of the energy delivered by the pump to the energy supplied to the pump shaft (liquid power divided by applied power).

Enclosed Impeller

An impeller in which the pumped liquid is confined by the sidewalls (shrouds) and vanes of the impeller.

Fire Pump Alternate Manufacturing Location

A location that manufactures a complete pump to the design requirements of the Fire Pump Manufacturer (OEM) or modifies (i.e. trimming of a pump impeller) an OEM supplied (bare-shafted) fire pump.

The Fire Pump Alternate Manufacturing Location may be an alternate facility owned and operated by the OEM or a facility owned by others that performs the complete, or partial, manufacturing of the complete fire pump and/or package under direct control of the OEM.

Fire Pump Manufacturer

The manufacturer of the certified fire pump is also referred to as the Original Equipment Manufacturer (OEM) of the fire pump.

Fire Pump Package

An assembled fire pump, driver, controller and components, see Appendix D, necessary to provide a complete pump installation.

Fire Pump Packager

The Fire Pump Manufacturer can delegate, through a legal agreement, the function of assembling the fire pump package to a third party known as the fire pump packager. Alternatively, or in addition to, a Fire Pump Packager may package or just distribute complete private labeled fire pump packages.

The Fire Pump Packager may be a facility owned and operated by the Fire Pump Manufacturer or a facility owned by others that performs the assembly of the complete fire pump package under direct control of the OEM.

Fire Pump Private Labeler

A company, other than the Fire Pump Manufacturer (OEM), that has a legal agreement with the OEM whereby the pump is manufactured and labeled by the OEM in the name of the Private Labeler.

In order to enter into a Fire Pump Private Label agreement, a Fire Pump Private Labeler must be one of the following entities:

- Fire Pump Manufacturer
- Fire Pump Alternate Manufacturer
- Fire Pump Packager

Maximum Power

The greatest speed-corrected power required to drive the pump at rated speed and at any point along its characteristic curve, and through the pumps total run out condition. This is determined under conditions of increasing positive suction head.

Mechanical Seals

A sealing device which forms a running seal between the rotating and stationary components. They may be used in place of compression (soft) packing. All mechanical seals are constructed of three basic sets of parts:

- A set of primary seal faces: one rotary and one stationary
- A set of secondary seals known as shaft packings and insert mountings such as 0-rings, wedges and V-rings
- Mechanical seal hardware including gland rings, collars, compression rings, pins, springs and bellows

The primary seal is achieved by two very flat, lapped faces perpendicular to the shaft. The rubbing contact between these two flat mating surfaces minimizes leakage. One face is held stationary in a housing and the other face is fixed to, and rotates with, the shaft. Dissimilar materials are usually used for the stationary insert and the rotating seal ring face in order to prevent adhesion of the two faces.

Cartridge Seal Type

This type of mechanical seal is a completely self-contained unit (including stationary and rotating seal faces, gland sleeve, mating ring, etc.) which is pre-assembled and preset before installation. The cartridge mechanical seal is a complete seal assembly which is manufactured, assembled and calibrated by the mechanical seal manufacturer.

Component Type

This type of mechanical seal is assembled from the individual components directly onto the shaft. The components usually consist of a rotating unit with a mating face which is in contact with a stationary unit. The rotating unit seals in two places, at the interface between the rotating face and the stationary face and between the shaft and the seal body. The stationary unit seals against the pump body.

Split Seal Type

This type of mechanical seal has its primary sealing elements and other components split. The seal can be mounted on a pump without removing the impeller.

Multiple Stage Pumps

Horizontal split-case, centrifugal fire pumps with more than one impeller on the same shaft. The number of stages is determined by the number of impellers.

Radial Split-Case Centrifugal Fire Pumps

Radial split-case centrifugal fire pumps are pumps with the shaft in a horizontal position, with a housing which is split in a plane perpendicular to the axis of rotation. The term vertically split is also used.

Rated Capacity

Capacity in gallons per minute - gal/min (liter/min - L/min), at rated pressure and speed.

Rated Pressure

Pressure in pounds per square inch - psi (kilopascals - kPa) developed by the pump when operating at rated capacity and speed.

Shutoff or Churn Pressure

The net pressure in psi (kPa) developed by the pump at rated speed with zero flow.

Single Stage Pump

A pump in which the total head is developed by one impeller.

Stuffing Box Packing

Typically, an arrangement consisting of rings of packing, a lantern ring for the injection of a lubricating and/or flushing liquid, and a gland to hold the packing and maintain the desired compression for a proper seal. The function of packing is to control leakage it is not intended to eliminate it completely. The packing is lubricated by the pumped liquid. The lantern ring is supplied for situations where the stuffing box pressure is below atmospheric pressure, to inject lubrication into the stuffing box by the use of a bypass line from the pump discharge to the lantern ring connection.

Off-Site Test Facilities

The location where testing will be performed that is not operated by the certification agency and which provides all of the following:

a.) All required test and data collection equipment.
b.) A formal calibration system with traceability to nationally recognized standards by an ISO 17025 accredited calibration service.
c.) Test personnel who possess a thorough understanding of, and the ability to conduct, the required tests.

Total Discharge Head

The gauge reading in psi (kPa) at the discharge flange of the pump, referred to the pump centerline, plus the velocity head at the point of gauge attachment.

Total Suction Head

The condition when the suction pressure is above atmospheric. The total suction head is the algebraic sum of the gauge reading in psi (kPa) at the pump suction flange, referred to the pump centerline, and the velocity head at the point of gauge attachment. Also called “positive suction pressure.”

Total Suction Lift

The condition when suction pressure is below atmospheric. The total suction lift is the algebraic sum of the gauge reading in psi (kPa) at the suction flange of the pump, referred to the pump centerline, and the velocity head at the point of gauge attachment.

Total Head

The algebraic difference between the total discharge head and the total suction head. Where suction head exists, total head equals total discharge head minus total suction head. Where suction lift exists, total head equals total discharge head plus total suction lift.

Vertical Mounted Split-Case Centrifugal Fire Pump

A pump with the shaft in a vertical position, with a housing which is split parallel to the shaft for easy maintenance and in which the pressure is developed by the action of centrifugal force.

2. GENERAL INFORMATION

2.1 PRODUCT INFORMATION

2.1.1 Pumps covered by this standard include those designed for one of the following capacities: 25, 50, 100, 150, 200, 250, 300, 400, 450, 500, 750, 1000, 1250, 1500, 2000, 2500, 3000, 3500, 4000, 4500, 5000 gal/min (95, 190, 380, 570, 755, 945, 1135, 1515, 1705, 1895, 2840, 3785, 4730, 5680, 7570, 9465, 11 355, 13 250, 15 140, 17 035, 18 925 L/min) or larger.

2.1.2 Pumps shall have a minimum rated pressure of at least 40 psi (275 kPa).

2.1.3 In order to meet the intent of this standard, split-case type, centrifugal fire pumps must be examined on a model-by-model, type-by-type, manufacturer-by-manufacturer, and plant-by-plant basis. This is predicated on the basis that identical designs, fabricated in identical materials by different manufacturers or, even by different plants of the same manufacturer, have been seen to perform differently in testing. Sample fire pumps, selected in conformance to this criterion, shall satisfy all of the requirements of this Standard.

2.2 CERTIFICATION APPLICATION REQUIREMENTS

The manufacturer shall provide the following preliminary information with any request for certification consideration:

- a complete list of all models, types, sizes, and options for the products or services being submitted for certification consideration;
- anticipated pump performance, including total head, power requirements, and efficiency versus flow characteristics. If different impellers or a range of impellers are used to obtain the rated head range for the pump being examined, complete details shall be provided concerning the range of performance specifications to be evaluated;
- calculations to determine shaft size, casing bolt size, and anti-friction bearing life;
- if mechanical seals are provided, all sizing and design information shall be submitted for evaluation, (See Section 3.2.7)
- general assembly drawings (showing the pump and attachments), one complete set of manufacturing drawings, materials list(s) and physical property specifications, anticipated marking format, brochures, sales literature, specification sheets, installation, operation and maintenance procedures;
- the number and location of manufacturing facilities and,
- all documents shall identify the manufacturer's name, document number or other form of reference, title, date of last revision, and revision level. All foreign language documents shall be provided with English translation.

2.3 REQUIREMENTS FOR SAMPLES FOR EXAMINATION

Following set-up and authorization of a certification examination, the manufacturer shall submit samples for examination and testing based on the following:

2.3.1 Sample requirements are to be determined by the certification agency.

2.3.2 Requirements for samples may vary depending on design features, results of prior testing, and results of the foregoing tests.

2.3.3 The manufacturer shall submit samples representative of production.

2.3.4 The manufacturer shall provide the test facilities, which are required to evaluate the split-case type, centrifugal fire pumps.

3. GENERAL REQUIREMENTS

3.1 REVIEW OF DOCUMENTATION

3.1.1 During the initial investigation and prior to physical testing, the manufacturer's specifications, and details shall be reviewed to assess the ease and practicality of installation and use. The certification examination results may further define the limits of the final certification.

3.2 PHYSICAL OR STRUCTURAL FEATURES

3.2.1 Pump

Pumps shall be designed for rated capacities equal to or greater than 25 gal/min (95 L/min). Rated pump pressures shall be at least 40 psi (275 kPa). Castings shall be free of defects which could make them unfit for their intended use. Flange dimensions, bolt layouts, and threaded openings used in pipe connections shall conform to a recognized national or international standard. Two or more pump ratings may be assigned to a single characteristic curve; however, the maximum power requirements used in selecting a driver shall be based on the highest power requirement, regardless of where it occurs on the entire characteristic curve.

3.2.2 Pump Casing

The pump casing shall be designed to permit examination and removal of impellers and other interior parts without disturbing suction or discharge piping. A drain opening(s) shall be provided so that all parts of the pump casing can be drained. The opening shall be threaded to receive a corrosion resistant pipe plug at least 1/2 in. nominal size. Renewable casing wearing rings shall be provided. Impeller wear rings may be provided, as an option.

3.2.3 Water Passages

All water passages shall be designed to minimize the possibility of foreign materials becoming lodged in them. The minimum width of these passages at the periphery or at any point within the impeller shall be at least 1/2 in. (12.7 mm) for pumps rated 500 gal/min (1895 L/min) and larger. Passages in pumps having rated capacities of 100 to less than 500 gal/min (380 to less than 1895 L/min) shall be at least 3/8 in. (9.5 mm). Passages in pumps having rated capacities less than 100 gal/min (380 L/min) shall be at least 1/4 in. (6.3 mm).

3.2.4 Impeller

Impellers shall be securely attached in a radial direction to the pump shaft. No impeller shall contact the casing under normal operating conditions. Impellers shall be the closed type. All impellers shall be dynamically balanced. Calculations shall be provided to show that the impeller will not come into contact with the casing at any point on the characteristic curve, including shut-off.

3.2.5 Shaft

Shafts shall be of adequate size and strength to successfully transmit the torques encountered in starting and during operation while supporting the impeller and other rotating parts.

In order to safeguard against shaft failure, the maximum torsional shearing stress, as calculated by the formula below, shall not exceed 30 percent of the elastic limit in tension and 18 percent

of the ultimate tensile strength of the shaft material. For shafts with keyways, a further 25 percent reduction is required.

Renewable shaft sleeves shall be provided to adequately safeguard the shaft against wear, erosion, and corrosion. Shaft sleeves shall be of a hard bronze or other corrosion resistant material.

Maximum Torsional Shearing Stress:

English

$$S_s = \frac{3.21 \times 10^5 \times P}{n \times d^3}$$

Metric

$$S_s = \frac{4.86 \times 10^{10} \times P}{n \times d^3}$$

Where: S_s - Torsional shear stress, psi (kPa)
P - Maximum input power demand, hp (kW)
n - Rated speed, r/min
d - Shaft diameter, in. (mm)

3.2.6 Shaft Seals

3.2.6.1 The shaft seal, soft packing or mechanical seal, shall adequately safeguard against excessive water leakage out of the pump when suction pressure is above atmospheric, and prevent air leakage into the pump when the suction pressure is below atmospheric. Systems shall be designed so that suction pressure is always positive.

3.2.6.2 Mechanical Seals

Use of mechanical seals is restricted to those applications where only clean water is pumped. Clean water shall be free of debris and particles in suspension liable to cause accumulations in the system piping. Water with excessive contaminants can cause accumulations, adhesion, clogging or abrasion which can adversely affect the performance of mechanical seals. Suction supplies shall not be from open bodies of water, e.g., retention ponds, lakes or rivers. The pump shall operate with positive pressure conditions at the pump inlet at all times. Mechanical seals shall not be used in vertically mounted split-case pumps.

Mechanical seals shall be tested in each pump model; it does not necessarily follow that acceptance of a mechanical seal for one model of pump translates to acceptance for other pump models, even by the same manufacturer. The pump assembly is certified; not the mechanical seal.

Complete detailed instructions for the removal and replacement of the mechanical seals shall be included in the manufacturer's maintenance, operation and installation instructions. Prior to shipment of the pump, the manufacturer shall document that the pump's suction supply is not be from open bodies of water and is free of debris and particles in suspension liable to cause accumulations in the system piping.

Mechanical Seals shall meet all the following design requirements:

3.2.6.2.1 Mechanical seals of the component, cartridge, and split types shall be acceptable.

3.2.6.2.2 Seals shall be designed by the seal manufacturer and shall be used in strict accordance with the seal manufacturer's specifications for pressure; peripheral velocity; seal face squareness; seal chamber concentricity; and shaft deflection and alignment. The seals shall be suitably matched to the pump characteristics.

3.2.6.2.3 The seal shall be suitable for the vacuum level which may be experienced during startup to prevent air from leaking into the system. This shall be verified during Suction Lift testing. Seal faces shall be mechanically loaded to prevent leakage when the pump is not running.

3.2.6.2.4 Hydraulically balanced seals shall be used to reduce heat generation and face wear.

3.2.6.2.5 A secondary containment element, such as a segmented floating bushing, shall be used behind the seal faces of the mechanical seal. The secondary containment element shall prevent flow of water towards the motor, and allow pumping pressure to develop in the event of mechanical seal failure.

3.2.6.2.6 Primary sealing faces shall be either:

- Resin impregnated carbon graphite on silicon carbide or tungsten carbide, or
- Silicon carbide on silicon carbide
- Other material combinations with equivalent or superior wearing properties.

The sealing surfaces shall be of such flatness as to allow pumps to remain visibly leak-free at the seals through all phases of testing.

3.2.6.2.7 Secondary sealing elastomers shall be ethylene-propylene or fluorocarbon rubbers or of materials equivalent to or superior to the properties of these materials.

3.2.6.2.8 Glands, drive holder, segmented bushing, and miscellaneous parts shall be made of corrosion resistant materials equivalent to or greater than 304 stainless steel.

3.2.6.2.9 Seal loading springs shall either be isolated from the pumped liquid or shall be of the single spring design to prevent clogging and corrosion which may affect seal loading. Springs isolated from the pumped fluid shall have corrosion characteristics equivalent to 304 stainless steel or greater. Springs in contact with the pumped fluid or of multiple spring designs shall be fabricated of Hastelloy C alloy or materials of equivalent or greater corrosion resistance.

3.2.6.2.10 Two ports with tapped connections shall be provided to allow for flushing. The seal shall be flushed using circulation from the pump discharge to facilitate heat removal, venting, and to remove solids accumulation. A minimum vapor pressure margin of 30 psi (205 kPa) at the maximum operating temperature shall be maintained. The seal shall be applied with

discharge recirculation. An example of a discharge recirculation piping plan can be found in API Piping Plan 11, API Standard 682 - *Pumps - Shaft Sealing Systems for Centrifugal and Rotary Pumps*.

3.2.6.2.11 The compatibility between the mechanical seal specifications and tolerance data and the pump specifications shall be verified. This compatibility shall be verified for the most extreme expected operating conditions, (Shut-off and maximum flow) and for the full range of speeds and impeller diameters. This shall include radial thrust calculations showing that the shaft deflection, at rated capacity, shut-off and maximum capacity, does not exceed the mechanical seal allowances.

Radial thrust shall be calculated as follows, (shown for shut-off calculation):

(English units)

$$R_{SO} = K_{so} \times \left[\frac{H_{so} \times S}{2.31} \right] \times D_2 \times B_2$$

(SI units)

$$R_{SO} = 9810 \times \left(K_{so} \times H_{so} \times S \times D_2 \times B_2 \right)$$

Where:

R_{so} - Radial thrust at shutoff, lb (N)
K_{so} - Thrust factor at shutoff, from Hydraulics Institute Standards, dimensionless
H_{so} - Total head of pump at shutoff, ft. of H_2O (m of H_2O)
S - Specific gravity of fluid (fresh water = 1), dimensionless
D_2 - Diameter of impeller, in. (m)
B_2 - Width of impeller at discharge, including shrouds, in. (m)

3.2.7 Bearings

Suitable bearings shall be provided to ensure smooth, low friction rotation of the impeller shaft. When anti-friction bearings are used, they shall be designed to withstand the maximum radial and thrust loads encountered during maximum load conditions. Water slingers and dust caps or other suitable means of preventing water or other foreign matter from entering the bearings shall be provided.

To provide adequate durability, anti-friction bearings shall have the following features:

- a minimum calculated life rating of not less than 5000 hours at maximum load;
- arrangement to float axially on one or both ends;
- grease lubrication, with a grease fitting and relief hole if lubrication is necessary.

Calculations shall be provided to verify the bearing life exceeds the 5000 hour requirements. Drawings of the impeller(s), shaft and shaft sleeves shall identify weights of these components.

3.2.8 Electric Motor

3.2.8.1 The electric motor shall be provided as an integral part of the pumping unit. Drivers shall be electric motors designed per NEMA MG 1 or IEC 60034-1.

3.2.8.2 The motor shall be sized (in horsepower or kilowatts) such that the maximum motor current in any phase under any anticipated condition of pump load and voltage

unbalance does not exceed the motor rated full-load current multiplied by the motor service factor.

3.2.8.3 Electric motors for fire pump service require a winding insulation temperature rating of NEMA/IEC Class B 266°F (130°C) or greater.

3.2.8.4 To protect against water ingress, electric motors for fire pump service require minimum rating equivalent to a NEMA open drip poof type or have a minimum IEC rating of IP22.

3.2.8.5 Eyebolts or equivalent lifting points shall be provided on the electric motor to lift the motor safely. Strength calculations for lifting mechanism shall be provided.

3.2.9 Coupling

Couplings between the fire pump and the pump driver shall not be of the All-Elastomeric Type. Couplings that utilize elastomeric components are acceptable as long as the elastomeric component is not the only means of power transmission. Examples of these couplings are: pin and bushing, steel flex grid, jaw-type, and drive shafts. Couplings shall be of the proper size for the application.

3.2.10 Baseplate (Vertically Mounted Pumps Only)

The baseplate of horizontal split-case centrifugal fire pumps shall be suitably designed to support the pump and motor without excessive vibration or visible distortion. Calculations will be required to show the baseplate is adequately designed to support the horizontal split-case centrifugal fire pump mounted and installed in the vertical position.

3.2.11 Circulation Relief Valve

Each pump shall have a circulation relief valve listed for the fire pump service installed and set below the shutoff pressure at minimum expected suction pressure. This valve is usually found on the pump casing but may be installed on the discharge side of the pump before the discharge check valve. It shall provide flow of sufficient water to prevent the pump from overheating when operating with no discharge. Provisions shall be made for discharge to a drain. Circulation relief valves shall not be tied in with the packing box or drip rim drains. Minimum size of the circulation relief valve shall be 3/4 in. NPS for pumps with a rated capacity not exceeding 2500 gpm (9465 L/min) and 1 in. NPS for pumps with a rated capacity of 3000 to 5000 gpm (11,355 to 18,925 L/min). The relief valve shall not be piped to the pump suction or supply connection.

Exception: This rule shall not apply to engine-driven pumps for which engine cooling water is taken from the pump discharge.

3.2.12 Miscellaneous Components

If fabricated (welded) steel or cast fittings which are not certified are provided by the pump manufacturer as a part of the pump assembly (i.e., suction and discharge adaptors), they shall be evaluated as part of the pump certification program. This shall normally include a review of detail drawings and hydrostatic tests to at least 700 psi (4825 kPa) or four times the rated working pressure, whichever is greater, for 5 minutes.

3.3 PUMP PACKAGE

The pump manufacturer shall assemble and supply the complete pump package (as detailed in Appendix D).

Certified fire pumps shall be manufactured or packaged at the location(s) audited by the certification agency and as specified in the certification report.

3.4 MATERIALS

All materials used in these fire pumps shall be suitable for the intended application. At a minimum, the impellers, impeller wear rings, impeller nut, casing wear rings, water-seal rings, stuffing box gland, gland nut, shaft sleeve, and interior bolts or screws shall be constructed of corrosion resistant materials. Mechanical seals shall be constructed of the materials detailed in Section 3.2.6.2.

3.5 MARKINGS

3.5.1 A permanently-marked, legible, corrosion-resistant nameplate shall be securely attached to the pump or bedplate where it shall be easily visible. The nameplate shall include the following information:

- manufacturer's name and address;
- country of manufacture (if different than above)
- model or type designation;
- rated capacity;
- rated total head;
- rated speed;
- maximum power required;
- impeller diameter(s);
- number of stages;
- pump serial number;
- manufacturer and serial number of the driver;
- manufacturer and serial number of the controller; and;
- certification agency's mark of conformity.

3.5.2 Pumps that are available with both packing and mechanical seals shall have unique model numbers. The model numbers can be completely different or only slightly changed from one to the other. (i.e. the letter "M" could be added to the end of the model number to design mechanical seals.)

3.5.3 Pumps that are packaged or produced at more than one location shall be identified as the product of a particular location.

3.5.4 An arrow indicating the direction of pump rotation shall be cast into the pump casing. A corrosion resistant metal nameplate bearing the arrow shall be considered acceptable if permanently fastened to the fire pump body.

3.5.5 The model or type identification shall correspond with the manufacturer's catalog designation and shall uniquely identify the product as certified. The manufacturer shall not place this model or type identification on any other product unless covered by a separate agreement.

3.5.6 The certification agency's mark of conformity shall be displayed visibly and permanently on the product. The manufacturer shall not use this marks on any other product unless such product is covered by separate agreement with the certification agency.

3.5.7 All markings shall be legible and durable.

3.6 MANUFACTURER'S INSTALLATION AND OPERATION INSTRUCTIONS

Maintenance, operation and installation instructions, including any special dimension requirements, shall be furnished by the manufacturer. Instructions shall be provided with each fire pump.

3.7 CALIBRATION

3.7.1 Each piece of equipment used to verify the test parameters shall be calibrated within an interval determined on the basis of stability, purpose, and usage of the equipment. A copy of the calibration certificate for each piece of test equipment is required. The certificate shall indicate that the calibration was performed against working standards whose calibration is certified and traceable to an acceptable reference standard and certified by an ISO 17025 accredited calibration laboratory. The test equipment shall be clearly identified by label or sticker showing the last date of the calibration and the next due date. A copy of the service's provider's accreditation certificate as an ISO 17025, "General Requirements for the Competence of Testing and Calibration Laboratories", accredited calibration laboratory should be available.

3.7.2 When the inspection equipment and/or environment is not suitable for labels or stickers, other methods such as etching of control numbers on the measuring device are allowed, provided documentation is maintained on the calibration status of thus equipment.

3.8 TOLERANCES

Tolerances on units of measure shall be as described in Appendix E, unless otherwise specified.

4. PERFORMANCE REQUIREMENTS

4.1 DESIGN AND CALCULATION REVIEW

4.1.1 The pump shall conform to the manufacturer's drawings and specifications and to the certification agency's design and calculation requirements stated in Section 3.

4.1.2 A sample pump shall be examined and compared to drawings and specifications. It shall be verified that the sample conforms to the physical and structural requirements described in Section 3, General Requirements.

4.1.3 The following calculations shall be reviewed and compared to the requirements stated in Section 3:

- Maximum torsional shearing stress;
- Mechanical seal and pump compatibility;
- Casing bolt strength;
- Bearing life calculations;
- Shaft deflection and impeller clearance/interference;
- Radial load calculations

4.2 PERFORMANCE

4.2.1 The following pump performance and testing is required:

- The pump shall develop its rated pressure when delivering its rated capacity.
- The pump shall develop at least 65 percent of its rated pressure while delivering 150 percent of the rated capacity.
- The pump shall not exceed 140 percent of its rated pressure at any point along its characteristic curve (pressure vs. flow), including the shutoff point. The shutoff head shall not be less than 99 percent of the maximum head.
- The maximum power required shall be determined.

4.2.2 At least one sample of each rated capacity shall be tested. The minimum and maximum impeller diameters of each impeller design, submitted for certification, shall be tested to obtain the desired head range(s) for the pump. Intermediate impeller diameters may be tested as needed to ensure the certification agency's understanding of the intermediate size impeller pump performance.

4.2.3 The pump shall be operated at various flow rates to generate total head, power, and efficiency curves. At each flow the total head, power required, and speed shall be measured. A minimum of ten flow readings shall be taken to generate the curve with two of the readings taken at maximum power of the pump. All test speeds must be ± 4 percent of the rated speed. In order to develop characteristic curves, test data shall be corrected to rated speed by means of the affinity relationships.

4.2.4 A total suction head adequate to produce the maximum power requirement for the pump shall be provided. maximum power is the greatest power required to drive the pump at any point along its characteristic curve, and is defined as the point where a zero slope of the tangents to the characteristic power curve occurs. The maximum power required shall occur when there is no increase in power with an increase in the total suction head at that same flow and speed.

4.3 SUCTION LIFT

4.3.1 The pump shall develop at least 65 percent of its rated pressure when operating at a suction lift of at least 15 ft. (4.6 m), referred to sea level, and delivering 150 percent of the rated capacity. If mechanical seals are used, they shall not allow air to leak into the pump at any point along the characteristic curve, not including shut-off.

4.3.2 At least one sample of each rated capacity shall be tested. The minimum and maximum impeller diameters of each impeller design, submitted for certification, shall be tested to obtain the desired head range(s) for the pump. Intermediate impeller diameters may be tested as needed to ensure the certification agency's understanding of the intermediate size impeller pump performance.

4.3.3 The pump shall be operated with a minimum suction lift of 15 ft. (4.6 m), referred to sea level, at various flow rates to generate total head, power, and efficiency curves. A minimum of eight flow readings, all at a suction lift of 15 ft. (4.6 m), shall be taken to generate the curve. At each flow the total head, power required, and speed shall be measured. A minimum of three flow readings in close proximity to 150 percent of rated flow, (within ± 10 percent of rated flow from 150 percent of rated flow), shall be taken, with the 150 percent point within the span of these three points. All test speeds must be ± 4 percent of the rated speed. In order to develop characteristic curves, test data shall be corrected to rated speed by means of the affinity relationship. All readings must be witnessed by a certification agency engineer.

4.3.4 If the pump is to be certified with mechanical seals for installations that meet the requirements of Section 3, at least one complete minimum 15 ft. (4.6 m) suction lift test, referred to sea level, with the mechanical seals installed shall be performed. This test shall be performed with the worst-case condition from the calculations in section 3.2.6.2.11.

4.4 FLANGE AND GASKET TIGHTNESS

4.4.1 No leakage, except at the shaft packing, shall be observed in a 5 minute test when hydrostatically tested at the required pressure.

4.4.2 A sample casing of each model and material shall be hydrostatically tested to a pressure equal to, or greater than, the sum of the maximum shutoff pressure of the pump plus a maximum allowable suction pressure specified by the pump manufacturer (P_{max} + $P_{max.\ Suction}$). The maximum shutoff pressure, P_{max}, is the highest shutoff pressure obtained in testing the range of impeller diameters and speeds submitted for certification. The test pressure shall be held for five minutes. In no case shall the maximum allowable suction pressure, $P_{max.\ Suction}$, be less than 75 psi (515 kPa), or the leakage test be run at less than 250 psi (1725 kPa). Casing bolts normally provided shall be used for this test.

4.5 HYDROSTATIC STRENGTH

4.5.1 No rupture, cracking or permanent distortion of any part of the pump shall be observed in a 5 minute test when hydrostatically tested at the required pressure.

4.5.2 A sample casing of each model and material shall be hydrostatically tested to a pressure equal to, or greater than, twice the sum of the maximum shutoff pressure of the pump plus a maximum allowable suction pressure specified by the pump manufacturer, 2 x (Pmax + Pmax. Suction). The maximum shutoff pressure, Pmax, is the highest shutoff pressure obtained in testing the range of impeller diameters and speeds submitted for certification. The test pressure shall be held for five minutes. In no case shall the maximum allowable suction pressure,

Pmax. Suction, be less than 75 psi (515 kPa), or the test be run at a pressure less than 400 psi (2760 kPa). Casing bolts normally provided shall be used for this test.

4.6 ENDURANCE TEST (VERTICALLY MOUNTED PUMPS ONLY)

4.6.1 The horizontal split-case pump, mounted vertically, shall be operated continuously for 24 hours under the conditions stated in Section 4.6.2, without excessive vibration, loosening of parts (fasteners, etc.), visible distortion of the baseplate, excessive generation of heat in the bearings, or rubbing of the impeller and casing wear rings.

4.6.2 A sample pump shall be operated continuously for 24 hours under conditions of maximum bearing thrust loading, (based on calculations provided by the manufacturer). Following the test, the pump shall be disassembled and the impeller and casing wear rings shall be examined for signs of rubbing. A method of ensuring that the pump runs continuously for 24 hours must be provided. All test speeds must be ± 4 percent of the rated speed.

4.7 ONE HOUR TEST (MECHANICAL SEAL PUMPS ONLY)

4.7.1 No failure of the mechanical seal is permitted when the pump assemblies shown to have the greatest shaft deflection are run as close to zero flow as possible (maximum radial load) for one hour for each available mechanical seal.

4.7.2 Each type and size of mechanical seal for use with the pump shall be tested for compliance. The pump assemblies selected for this test shall be of the impeller diameter and speed shown to have the greatest shaft deflection by calculation. Calculations shall be submitted for review prior to scheduling testing. The pump shall be run for one hour as close to zero flow (maximum radial load) as possible without boiling the water. In no case shall the discharge pressure be less than 95 percent of the shut-off pressure for the pump under test. No leakage of the mechanical seal is permitted. Subsequently, the pump shall be disassembled and the mechanical seals shall be examined for evidence of wear or other signs of failure of the mechanical seal.

4.8 TEST PROCEDURE

Pump testing is normally performed by the manufacturer at its facility. The certification agency shall witness the testing and obtain copies of the data and calibration certificates. The specific tests to be conducted shall be in accordance with the certification agency's test plan. Test procedures shall be in accordance with recommendations for centrifugal pumps in accordance with the latest edition of the Hydraulic Institute Standards, *Standard for Centrifugal, Rotary and Reciprocating Pumps*.

5. OPERATIONS REQUIREMENTS

5.1 DEMONSTRATED QUALITY CONTROL PROGRAM

5.1.1 A quality assurance program is required to assure that subsequent horizontal split-case centrifugal fire pumps produced by the manufacturer shall present the same quality and reliability as the specific horizontal split-case centrifugal fire pumps examined. Design quality, conformance to design, and performance are the areas of primary concern.

- Design quality is determined during the examination and tests, and may be documented in the certification report.
- Continued conformance to this standard is verified by certifier's surveillance program.
- Quality of performance is determined by field performances and by periodic re-examination and testing.

5.1.2 The manufacturer shall demonstrate a quality assurance program which specifies controls for the following areas:

- existence of corporate quality assurance guidelines;
- incoming quality assurance, including testing;
- in-process quality assurance, including testing;
- final inspection and tests;
- equipment calibration;
- drawing and change control;
- packaging and shipping; and
- handling and disposition of non-conformance materials.

5.1.2 Documentation/Manual

There should be an authoritative collection of quality procedures/policies. It should provide an accurate description of the quality management system while serving as a permanent reference for implementation and maintenance of that system. The system should require that sufficient records are maintained to demonstrate achievement of the required quality and verify operation of the quality system.

5.1.4 Records

To assure adequate traceability of materials and products, the manufacturer shall maintain a record of all quality assurance tests performed, for a minimum period of two years from the date of manufacture.

5.1.3 Drawing and Change Control

- The manufacturer shall establish a system of product configuration control that shall allow no unauthorized changes to the product. Changes to critical documents, identified in the certification report, may be required to be reported to, and authorized by the certification agency prior to implementation for production.

- Records of all revisions to all certified products shall be maintained.

5.2 SURVEILLANCE AUDIT

5.2.1 An audit of the manufacturing facility may be part of the certification agency's surveillance requirements to verify implementation of the quality assurance program. Its purpose is to determine that the manufacturer's equipment, procedures, and quality program are maintained to ensure a uniform product consistent with that which was tested and certified.

5.2.2 Certified products or services shall be produced or provided at, or provided from, location(s) disclosed as part of the certification examination. Manufacture of products bearing a certification mark is not permitted at any other location prior to disclosure to the certification agency.

5.2.3 The Fire Pump Manufacturer shall maintain design/documentation control and manufacture certified fire pumps only at the location(s) audited by the certification agency and as specified in the certification report.

5.2.4 The OEM is responsible to rectify any non-conformances discovered at the Alternate Manufacturing and/or the Fire Pump Packager facility to the satisfaction of the certification agency.

5.3 MANUFACTURER'S RESPONSIBILITIES

The manufacturer shall notify the certification agency of changes in product construction, components, raw materials, physical characteristics, coatings, component formulation or quality assurance procedures prior to implementation of such changes.

5.4 MANUFACTURING AND PRODUCTION TESTS

5.4.1 Test Requirement No. 1 - *Performance Test*

The manufacturer shall performance test 100 percent of production fire pumps, recording flow, total head, speed and power consumed at a minimum of eight points spanning from shut off to beyond 1.5 times rated flow. Speeds shall be within ± 4 percent of the listed speed. In order to develop the characteristic curve, test data shall be corrected to rated speed by means of the affinity relationship. This curve shall be supplied with the pump.

5.4.2 Test Requirement No. 2 - *Leakage Test*

The manufacturer shall test 100 percent of production fire pumps for body leakage to the maximum design working pressure, but not less than 250 psi (1725 kPa). The pressure shall be held for a minimum of five minutes with no objectionable leakage (except at the shaft packing), at any joint. Pump casing distortion or leakage is not allowed.

APPENDIX A:

Appendix A is intentionally blank

APPENDIX B:

Appendix B is intentionally blank

APPENDIX C: Test Procedures

There are several acceptable methods of obtaining the test data needed. In order to establish uniformity in method selection, the following techniques, based on recommendations by the Hydraulic Institute, are listed below. For more specific information such as test set-ups and the equations needed to compute results from raw data, reference should be made to the "Hydraulic Institute Standards", latest edition.

C.1 CAPACITY MEASUREMENTS

C.1.1 Weight

Scale measurements with accuracy of 0.25 percent of full scale shall be obtainable.

C.1.2 Volume

Reservoir measurements with accuracy of 0.5 percent of the reading shall be obtainable.

C.1.3 Venturi

A certified curve showing the calibration of the meter shall be provided. Machined tubes shall be accurate within ± 0.75 percent of the rate of flow. The size of the venturi needed shall be determined by the throat velocity. A maximum of 20 ft./sec (6.1 m/sec) shall be effected at the venturi throat at the rated capacity of the pump.

The accuracy of the venturi meter depends upon its installation within the hydraulic system. The meter shall not be adversely affected by improper flow conditions immediately preceding the venturi tube. Non-uniform velocity distribution or swirling or pulsating flow will affect the value of the coefficient. Table C.1.3 shows the length of straight pipe required ahead of the venturi tube expressed in terms of equivalent diameters.

Table C.1.3 *Straight Pipe Required After Any Fitting before the Venturi Meter in diameters of Pipe*

Fitting	***Meter Ratio (Throat to Inlet Diameter)***				
	0.4	***0.5***	***0.6***	***0.7***	***0.8***
One standard short radius elbow	1	2	3	4	6
Two elbows in same plane	2	3	4	6	8
Two elbows in planes at 90° and with straightening vanes	2	3	4	5	7
Standard cast iron flanged reducer	2	5	7.5	10	13
Standard cast iron flanged increaser	1	2	3	4.5	6
Globe valve with straightening vanes	2	4	6	9	12
Gate valve - 0.2 open	2	4	6	9	12
Gate valve - 0.5 open	2	3	4	6	8
Gate valve - full open	0	0.5	1	2	3

Note: A centrifugal pump pumping directly into a venturi meter should have at least 10 pipe diameters of straight pipe between it and the meter. This distance can be reduced if straightening vanes are properly used between the pump and venturi.

C.1.4 Nozzles

A certified curve showing the calibration of the nozzle shall be provided. When ASME long radius flow nozzles are used with an outlet to inlet diameter ratio from 0.2 to 0.7, the tolerance in the rate of flow should not exceed ± 0.75 percent for 3 in. pipe and over. When other nozzles are used with the same specifications listed above, the error should not exceed ± 1 percent of the rated flow. The nozzle size shall be selected so that the maximum velocity does not exceed 20 ft./s (6.1 m/s) at the nozzle throat.

C.1.5 Orifice Plate

A certified curve showing the calibration of a square edged concentric orifice plate shall be provided. The error should not exceed ± 1.5 percent of the reading when using an orifice-to-pipe diameter ratio from 0.10 to 0.80. Ratios outside of these limits should not be used. Preferred orifice to pipe diameter ratios are from 0.20 to 0.60.

To ensure accurate flow measurements, a sufficient length of straight pipe is required preceding and following the orifice plate. The values required expressed in terms of equivalent diameters, are shown in Tables C.1.5 (a) and (b). When “pipe taps” are used, the values shown in Tables C.1.5 (a) and (b) should be increased by 2 diameters.

Table C.1.5 (a) *Straight Pipe Required After Any Fitting before Meter in Diameters of Pipe*

Fitting	***Meter Ratio (Throat to Inlet Diameter)***						
	0.2	***0.3***	***0.4***	***0.5***	***0.6***	***0.7***	***0.8***
Tee or wye within line flow	6	6	6.5	7	8.5	10.5	14
One elbow, branch flow thru tee or wye, or flow from drum or separator	6	6	6.5	7	9	13	20.5
Globe valve - wide open	9	9	9.5	10.5	13	15	21
Gate valve - wide open	6	6	6	6	7.5	9.5	13.5
Two or more short radius elbows or bends in the same plane	7.5	7.5	8.5	10.5	13.5	18	25
Two or more long radius elbows or bends in the same plane	6	6	6.5	8	11	16	23
Two short radius elbows or bends in different planes	14.5	16	17.5	20.5	24.5	30	40
Two long radius elbows or bends in different planes	7	8	10	12	16	22	33

Note: A centrifugal pump pumping directly into a nozzle or orifice should have at least 10 pipe diameters of straight pipe between it and the meter. This distance can be reduced if straightening vanes are properly used between the pump and nozzle or orifice.

Table C.1.5 (b) *Straight Pipe Required After Meter before Any Fitting in Diameters of Pipe*

Fitting	***Meter Ratio (Throat to Inlet Diameter)***						
	0.2	***0.3***	***0.4***	***0.5***	***0.6***	***0.7***	***0.8***
Gate valve - wide open	0	0	0	0	0	0	0
Wye	0	0	0	0	0	0	4
Tee	0	0	0	0	0	3.5	4
Expansion joint	0	0	0	0	0	3.5	4
45° Elbow	0	0	0	0	3.5	3.5	4
Long radius elbow or bend	2	2.5	2.5	3	3.5	3.5	4

Regulators, control valves, and partly throttled gate valves	6	6	6	6	6	6	6

C.1.6 Weir

A rectangular sharp crested weir with a smooth vertical crest wall, complete crest contraction, free overfall and with the end contraction suppressed, is a suitable capacity measuring device. The weir should be calibrated in place with the water circuit.
When rectangular suppressed weirs are used, the error shall not exceed ± 2 percent of the flow under the following limitations of flow:

- The head is not smaller than 0.2 ft. (61 mm).
- The head is not larger than one-half the height of the weir.
- The head is not larger than one-half the length of the weir.

C.1.7 Electromagnetic Flow Meters

Electromagnetic flowmeters are based on Faraday's Law of Magnetic Induction that states that a voltage will be induced when a conductor, in this case water, moves at right angles through a magnetic field is proportional to the velocity of that conductor - the faster the flow rate, the higher the voltage. This voltage is picked up by sensing electrodes mounted in the meter tube and sent to the transmitter which takes the voltage and calculates the flow rate based on the cross-sectional area of the meter tube. Pressure drop across the meter is the same as it is through an equivalent length of pipe because there are no moving parts or obstructions to the flow.

Electromagnetic flow meters shall have an accuracy of ± 0.5 percent of the flow reading.

C.2 HEAD MEASUREMENTS

C.2.1 Instruments to measure head shall, when practical, be water columns or manometers and for high pressures shall be mercury manometers, bourdon gauges, electrical pressure transducers or dead weight gauge testers. If water gauges are used, errors due to water temperature difference within the gauge and pump, shall be avoided. Measuring instrumentation shall have records of calibration traceable to national standards. Tolerances shall not exceed ± 1.0 percent of the full scale.

C.2.2 It is important that steady flow conditions exist at the point of instrument connection. For this reason, it is necessary that pressure or head measurement be taken on a section of pipe where the cross-section is constant and straight. Five to ten diameters of straight pipe of unvarying cross-section following any elbow or curved member, valve, or other obstruction, are usually necessary to ensure steady flow conditions.

C.2.3 Special care shall be taken in the drilling of orifice or tap openings for gauges. The following precautions shall be taken:

- The orifice in the pipe shall be flush with and normal to the wall of the water passage.
- The wall of the water passage shall be smooth and of unvarying cross-section. For a distance of at least 12 in. (305 mm) preceding the orifice, all tubercles and roughness shall be removed with a file or emery cloth, if necessary.
- The orifice shall be of a diameter from 1/8 in. to 1/4 in. (3.2 mm to 6.4 mm) and of a length equal to twice the diameter.

- The edges of the orifice shall be provided with a suitable radius tangential to the wall of the water passage, and shall be free from burrs or irregularities.

C.2.4 The datum shall be taken as the centerline of the pump.

C.3 POWER MEASUREMENTS

C.3.1 Pump input power shall be determined by either transmission dynamometers, torsion dynamometers, strain gauge type torque measuring devices, or by the use of calibrated drivers.

C.3.2 When pump input power is to be determined by transmission dynamometers, the unloaded and unlocked dynamometer must be properly balanced, prior to the test, at the same speed at which the test is to be run. The scales should be checked against standard weights.

C.3.3 When pump input power is to be determined by torsion dynamometers, the unloaded dynamometer shall be statically calibrated prior to the test by measuring the angular deflection for a given torque; the tare reading on the dynamometer scale is taken at rated speed with the pump disconnected.

C.3.4 When strain gauge type torque measuring devices are used to measure pump input power, they shall be calibrated, with their accompanying instrumentation, at regular intervals.

C.3.5 When pump input power is to be determined by the use of a calibrated motor, measurements of power input shall be made at the terminals of the motor to exclude any line losses that may occur between the switchboard and the driver itself. Certified calibration curves of the motor must be provided. The calibration shall be conducted on the specific motor in question, and not on a similar machine. Such calibrations must indicate the true input-output value of the motor efficiency and not some conventional method of determining an arbitrary efficiency.

C.3.6 After the completion of any of the above tests, recalibration or rebalancing shall be checked to assure that no change has taken place. In the event of appreciable change, the test shall be rerun.

C.3.7 Calibrated laboratory type electric meters and transformers shall be used to measure power input to all electric motors.

C.4 SPEED MEASUREMENT

C.4.1 Measurement of speed shall be made by means of revolution counters, tachometers, or stroboscopic devices.

C.4.2 For speed measurements taken by means of a revolution counter, the timing period shall be of sufficient length to obtain a true average speed. The stopwatch shall be checked against a standard timer. If electric/electronic speed sensing element with electronic counter is used, it shall be checked against a suitable secondary frequency standard.

C.4.3 When a tachometer is used, it shall be calibrated against a revolution counter before and after the test. Tachometer readings shall be made at frequent intervals during the period each test reading is taken to determine an accurate measurement of average speed over that reading period.

C.4.4 When a stroboscopic device is used, the comparison frequency source shall be either line frequency, where stable, or a stable independent frequency. The speed shall be determined by the observation and deduction of slip from the synchronous speed.

C.5 TIME MEASUREMENT

Time measurement with accuracy of 1/100 of a second shall be obtainable.

APPENDIX D: Axial Split-Case Centrifugal Fire Pump Units (Packages)

The fire pump package consists of the following components which are furnished by the pump manufacturer, alternate manufacturer, or a fire pump packager. Where marked (*) certified components shall be supplied.

1. Fire pump*
2. Driver - diesel engine* or electric motor
3. Pump controller* (electric motor or diesel engine)
4. Flexible coupling (not all elastomeric) or drive shaft
5. Suction and discharge pressure gauges*
6. Pressure-relief valve* and waste cone, when required
7. Automatic air release valve*
8. Circulation-relief valve*
9. Substantial bedplate for pump and driver
10. Diesel engine accessories:
    i. starting batteries
    ii. rigid cooling water and fuel lines (May have short flexible elements in close proximity to engine to minimize vibration)
    iii. exhaust piping and muffler
    iv. fuel tank
11. Instruction, operation and maintenance manual in local language
12. Spare mechanical seals (optional, for pumps certified with mechanical seals)

APPENDIX E: Tolerance

Unless otherwise stated, the following tolerances shall apply:

Flow	+ 1/- 0 percent of value
Frequency (Hz):	± 5 percent of value
Length:	± 2 percent of value
Volume:	± 2 percent of value
Volume Per Unit Area:	± 5 percent of value
Power	± 1.5 percent of value
Pressure:	± 0.5 percent of value
Speed	± 0.3 percent of value
Temperature:	± 4°F (2°C)
Time:	+ 5/–0 seconds +0.1/–0 minutes

Unless stated otherwise, all tests shall be carried out at a room (ambient) temperature of 68 ± 9°F (20 ± 5°C).

APPENDIX F: Figures

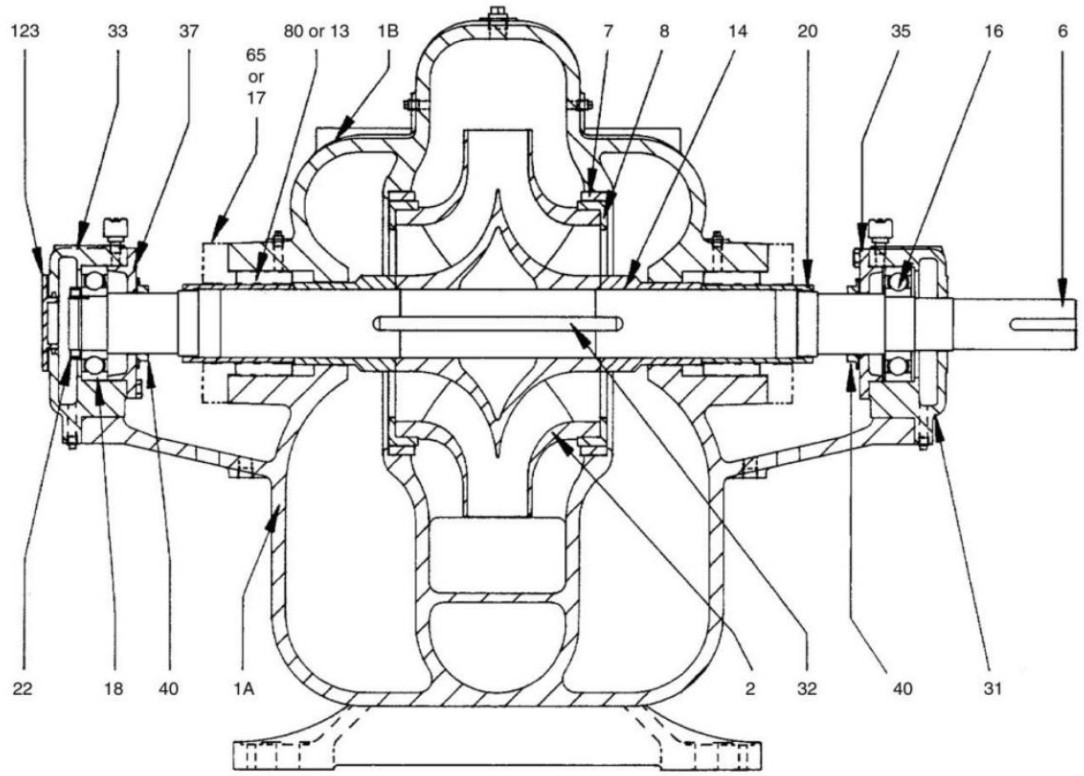

Provided courtesy of the Hydraulic Institute, Parsippany, NJ www.pumps.org

MECHANICAL SEAL CONSTRUCTION (Shown)			
1A	Casing, lower half	22	Locknut
1B	Casing, upper half	31	Housing, bearing inboard
2	Impeller	32	Key, impeller
6	Shaft	33	Housing, bearing outboard
7	Ring, casing	35	Cover, bearing inboard
8	Ring, impeller	37	Cover, bearing outboard
14	Sleeve, shaft	40	Deflector
16	Bearing, inboard	65	Seal, mechanical stationary element
18	Bearing, outboard	80	Seal, mechanical rotating element
20	Nut, shaft sleeve	123	Cover, bearing end
PACKING SEAL CONSTRUCTION			
(All above Components except #65 and 80 Plus below Components)			
	Packing		Packing Gland
	Lantern Ring		Stuffing Box Bushing
	Seal Piping		

Figure F-1. Axial Split-Case Centrifugal Fire Pump (Shown with Mechanical Seals)

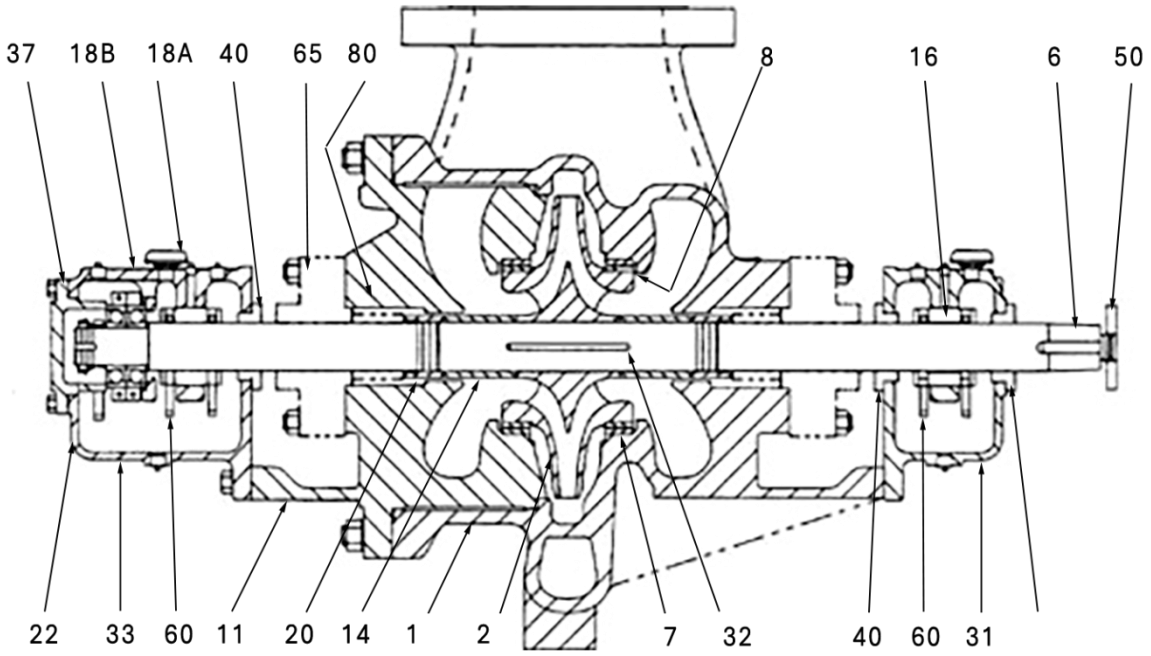

Provided courtesy of the Hydraulic Institute, Parsippany, NJ www.pumps.org

MECHANICAL SEAL CONSTRUCTION (Shown)			
1	Casing	22	Locknut, bearing
2	Impeller	31	Housing, bearing, inboard
6	Shaft	32	Key, impeller
7	Ring, casing	33	Housing, bearing, outboard
8	Ring, impeller	37	Cover, bearing, outboard
11	Cover	40	Deflector
14	Sleeve, shaft	50	Locknut, coupling
16	Bearing, inboard, sleeve	60	Ring, oil
18A	Bearing, outboard, sleeve	65	Packing Gland or Seal, mechanical, stationary element
18B	Bearing, outboard, ball	80	Packing and Lantern Ring or Seal, mechanical, rotating element
20	Nut, shaft sleeve		
PACKING SEAL CONSTRUCTION			
(All above Components except #65 and 80 Plus below Components)			
	Packing		Packing Gland
	Lantern Ring		Stuffing Box Bushing
	Seal Piping		

Figure F-2. Radial Split-Case Centrifugal Fire Pumps (Shown with Mechanical Seals)

APPENDIX G:

Appendix G is intentionally blank